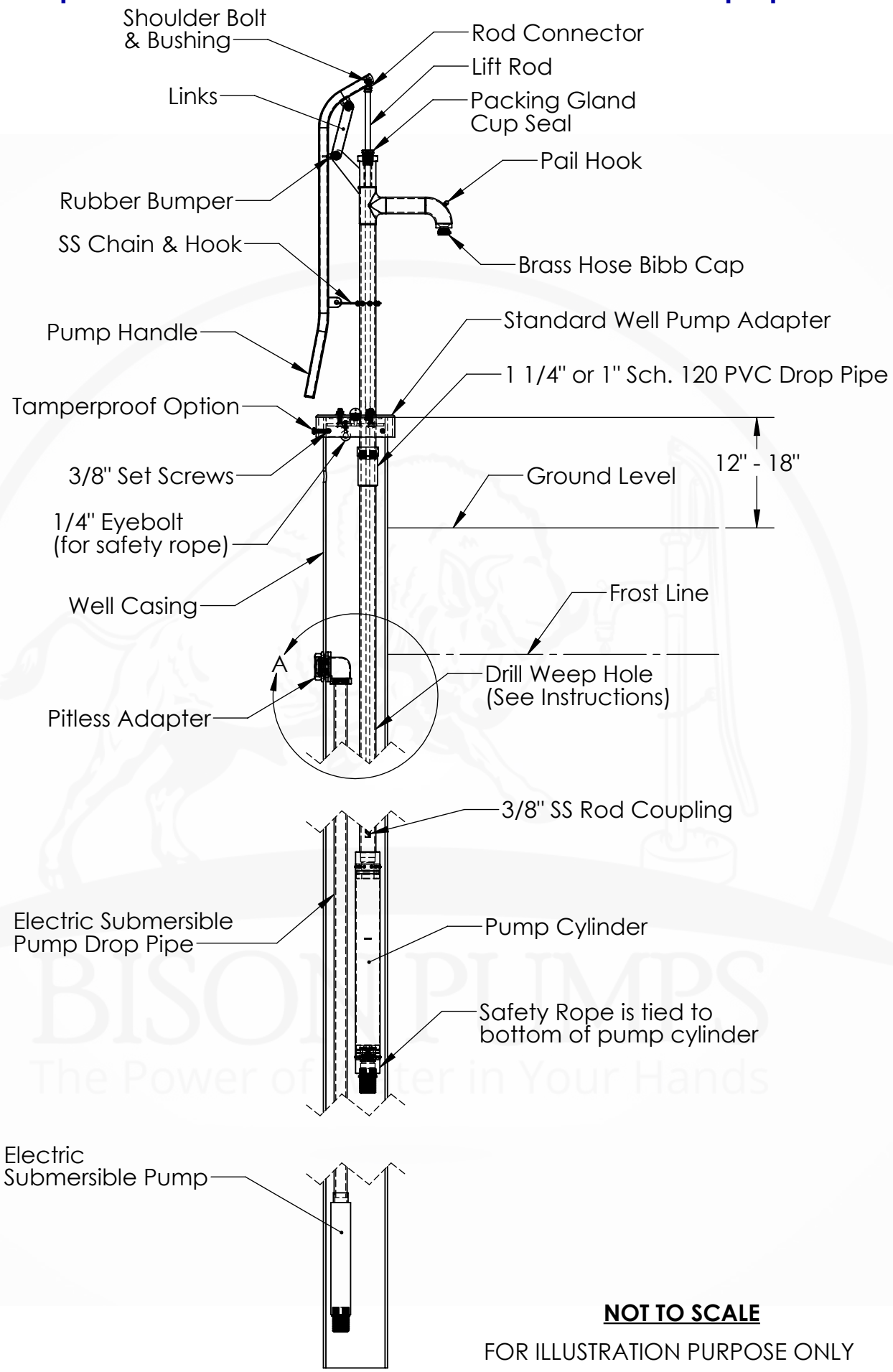

NOT TO SCALE

FOR ILLUSTRATION PURPOSE ONLY